Nikon

Nikkor 50mm f/1.8

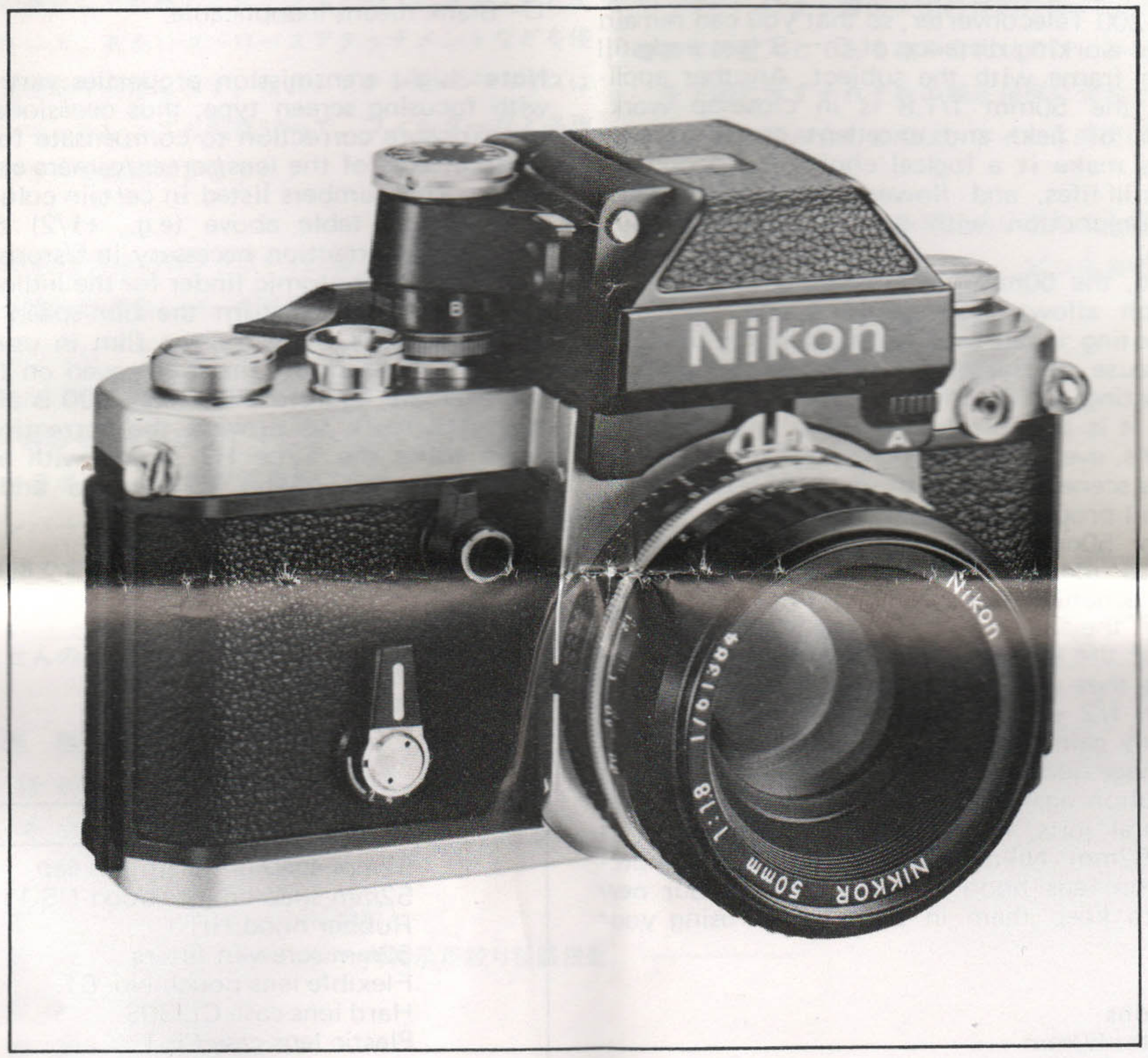

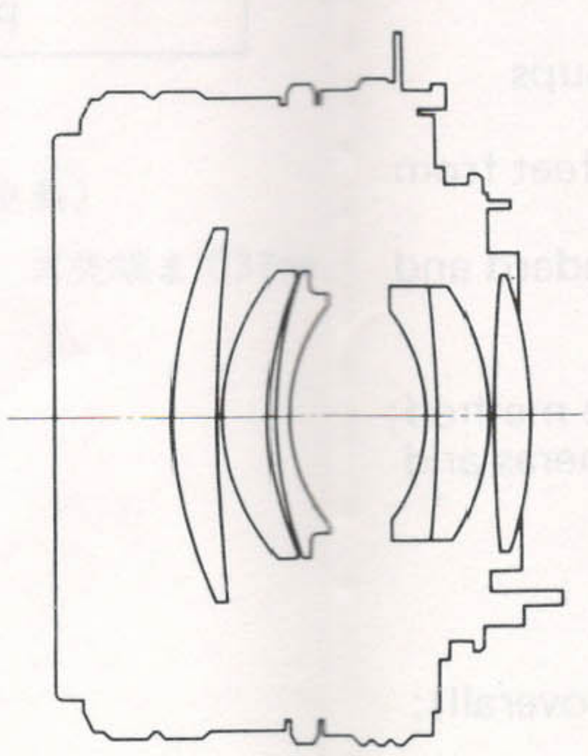

Nikon NIPPON KOGAKU K.K. Tokyo, Japan

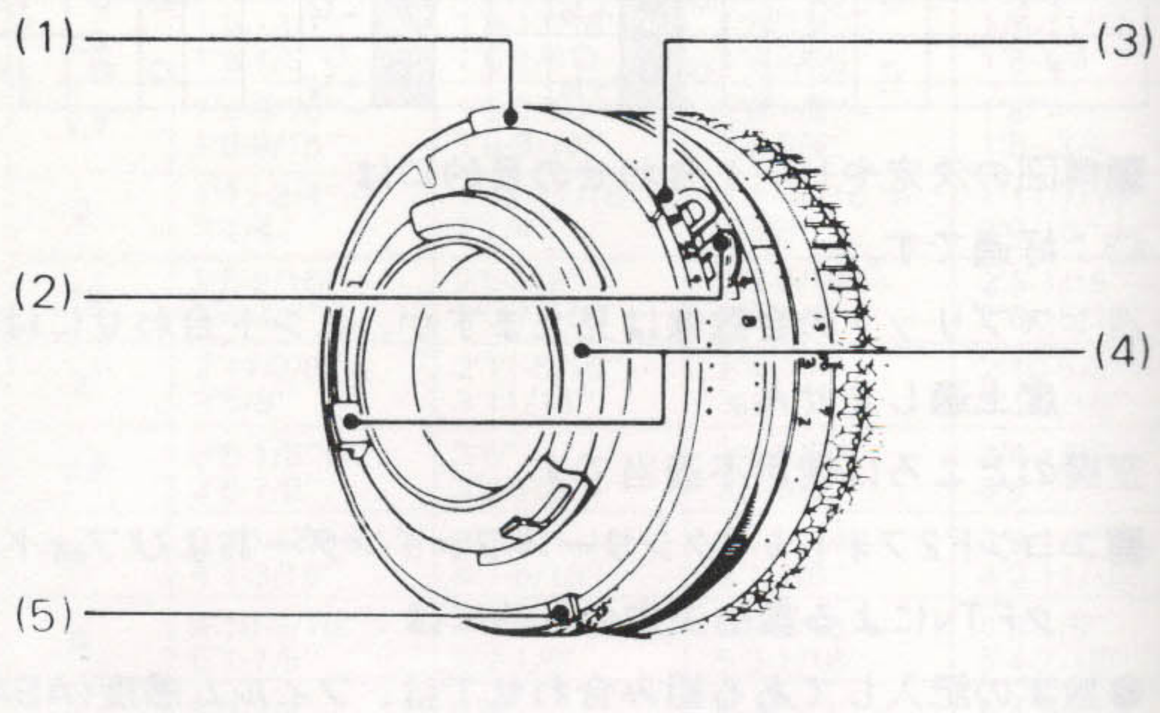

(1) 露出計連動ガイド
Meter coupling ridge
Steuerkurve
Protuberancia de acoplamiento al exposímetro
Index de couplage photométrique

(2) 露出計連動爪
Meter coupling shoe
Blendenmitnehmer
Zapata de acoplamiento al exposímetro
Fourchette de couplage du posemètre

(3) ファインダー内表示用絞り目盛
Aperture-direct-readout scale
Blendenskala für Sucher-Direktablesung
Escala de lectura directa de la abertura
Lecture directe du diaphragme

(4) レンズプロテクター
Rear element protectors
Hinterlinsenschutz
Protectores del elemento trasero
Protecteurs de l'élément arrière

(5) EE連動ガイド
EE servo coupling post
Kupplungsstift für automatische Blendensteuerung
Borne del servo acoplador EE
Index de servocommande diaphragme

Weighing 220 grams and extending 37mm from the camera body, the Nikkor 50mm f/1.8 is Nikon's lightest and most compact normal focal length lens. Optically it is classified as "normal," because its focal length is only slightly longer than the 43mm diagonal of the standard 24 x 36mm format in 35mm photography. A normal lens approximates normal human vision: objects at different distances from the camera are rendered in their proper size relationships, creating the impression of natural perspective.

The Nikkor 50mm f/1.8 is thus ideally suited for general photography, including travel and scenics, group shots, and full-length portraits. For natural-looking head and shoulder shots, you can double the focal length of the lens by attaching the optional Nikon TC-200 Teleconverter, so that you can remain at a normal-working distance of 5 ~ 8 feet and still fill up the frame with the subject. Another application of the 50mm f/1.8 is in close-up work. Its flatness of field and excellent correction for aberrations make it a logical choice for document copying, still lifes, and flower photography when used in conjunction with various Nikon close-up accessories.

In addition, the 50mm has a maximum aperture of f/1.8 which allows easy focusing and "available light" shooting in all but the most dimly-lit situations. Because of the effectiveness of Nikon Integrated Coating (NIC) in eliminating ghost images and flare, it is possible to get sharp and contrasty photographs, even when a bright light source is present in the scene. NIC is applied to all lens surfaces where it will produce beneficial results.

The Nikkor 50mm f/1.8 fully couples to both the full-aperture metering system and automatic diaphragm mechanism of all Nikon and Nikkormat cameras. In the case of non-AI type cameras, manual indexing of the lens maximum aperture is required. Remember that using the 50mm f/1.8 at apertures wider than f/2 with the TC-200 in place will not result in any gain in speed and could possibly cause a loss in image quality.

For protection against dust, fingerprints, salt spray, or accidental jolts, it is strongly recommended to attach a 52mm Nikon UV filter and the appropriate Nikon lens hood to the front of your new lens and to keep them in place while using your camera.

Specifications

Focal length: 50mm
Maximum aperture: f/1.8
Optical construction: 6 elements in 5 groups
Picture angle: 46°
Distance scale: Graduated in meters and feet from 0.45m (1.5 ft) to infinity (∞)
Aperture scale: f/1.8 ~ f/22 on both standard and aperture-direct-readout scales
Diaphragm: Fully automatic
Exposure measurement: Via full aperture method; meter coupling ridge provided for AI cameras and meter coupling shoe for non-AI cameras
Attachment size: 52mm (P = 0.75mm)
Filters: 52mm screw-in
Mount: Nikon F mount
Dimensions: 63.5mm dia. x 48mm long (overall); 37mm extension from flange
Weight: 220g

Recommended Focusing Screens

Nineteen different interchangeable focusing screens are available for F and F2 Nikon cameras to suit any type of lens or picture-taking situation. Those which are recommended for use with the 50mm f/1.8 lens are listed in the table below.

Camera \ Screen	A/L	B	C	D	E	G1	G2	G3	G4	H1	H2	H3	H4	J	K/P	M	R
F	◎	◎			◎	◎	◎ +½			◎	◎ +½			◎	◎		△
F2	◎	◎			◎	◎	◎ +½			◎	◎ +½			◎	◎		△

◎ = Excellent focusing
△ = Acceptable focusing.
The in-focus image in the central spot may prove to be slightly out of focus on film. Focus on the surrounding matte area.
□ = Blank means inapplicable.

Note: Light transmission properties vary somewhat with focusing screen type, thus occasionally requiring exposure correction to compensate for the combined effects of the lens/screen/camera combination in use. The numbers listed in certain columns of the combination table above (e.g., +1/2) denote the amount of correction necessary in f/stops. To adjust the camera's Photomic finder for the indicated f/stop correction, lift and turn the film-speed index ring until the ASA value for the film in use is aligned with the appropriate mark engraved on the ring. In the example figure shown, ASA 100 is aligned with the +1/2 mark to provide the correction required when using the Type H2 screen with a Photomic finder-equipped Nikon F2 camera and mounted Nikkor 50mm f/1.8 lens

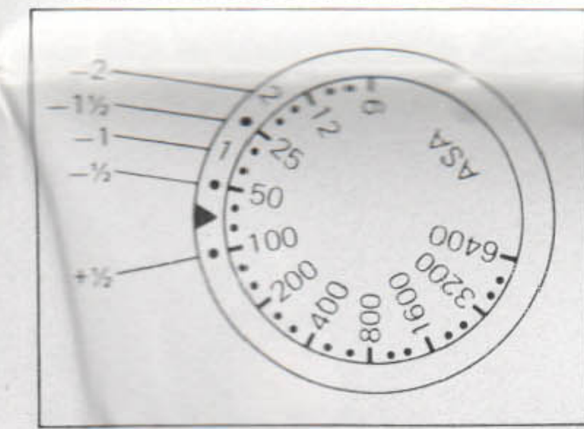

Accessories

52mm snap-on front lens cap
52mm snap-on lens hood HS-11
Rubber hood HR-1
52mm screw-in filters
Flexible lens pouch No. 61.
Hard lens case CL-30S
Plastic lens case CP-1
Rear lens cap LF-1

Photographic Ranges with Close-Up Attachments

(in.)

	Close-up attachment	Lens in normal position			Lens in reverse position		
		Reproduction ratio	Subject field	Focused distance	Reproduction ratio	Subject field	Focused distance
	Close-Up Lens No. 0	1/27.4–1/5.4	25.9 x 38.8–5.1 x 7.6	59.2–15.0	–	–	–
	Close-Up Lens No. 1	1/13.0–1/4.4	12.3 x 18.5–4.2 x 6.3	30.3–13.1	–	–	–
	Close-Up Lens No. 2	1/6.6–1/3.3	6.2 x 9.3–3.1 x 4.7	17.0–10.8	–	–	–
	E2 Ring	1/3.7–1/2.4	3.5 x 5.2–2.2 x 3.4	11.8–9.5	–	–	–
*	K Ring Set	1/8.9–1.1	8.4 x 12.6–0.90 x 1.3	22.1–7.9	–	–	–
**	PK-Series Rings	1/6.4–1.1	6.1 x 9.1–0.85 x 1.3	17.2–7.9	–	–	–
	Bellows PB-4, PB-5	1/1.2–3.6	1.1 x 1.7–0.26 x 0.40	7.9–11.7	1.6–4.3	0.60 x 0.91–0.22 x 0.33	8.3–13.0
***	Slide-Copying Adapter PS-4, PS-5	1/1.2–2.6	1.1 x 1.7–0.36 x 0.54	7.9–9.9	1.6–4.3	0.60 x 0.91–0.22 x 0.33	8.3–13.0
****	Repro-Copy Outfit PF-2, PF-3	1/14.6–1/6.7	13.8 x 20.7–6.3 x 9.5	33.6–17.7	–	–	–

接　写　表　このレンズを各種の接写用具に取り付けて使用するときの撮影範囲は次のようになります。

Fotografische Bereiche mit dem Nahaufnahme-Zubehör
Rangos Fotográficos con Accesorios de Acercamiento
Rapports Obtenus en Proxiphotographie et Photomacrographie

(cm)

	使用器具 Nahaufnahme-Zubehör Accesorio de acercamiento Accessoire macro	レンズ正方向 Objektiv in normaler Stellung Objetivo en posición normal Objectif monté normalement			レンズ逆向き Objektiv in umgekehrter Stellung Objetivo en posición invertida Objectif monté inversé		
		撮影倍率 Vergrösserungsbereich Relación de reproducción Rapport de reproduction	被写界面積 Bildfeld Campo del sujeto Champ couvert	撮影距離 eingestellte Distanz Distancia enfocada Distance de mise au point	撮影倍率 Vergrösserungsbereich Relación de reproducción Rapport de reproduction	被写界面積 Bildfeld Campo del sujeto Champ couvert	撮影距離 eingestellte Distanz Distancia enfocada Distance de mise au point
	クローズアップレンズNo.0 Vorsatzlinse Nr. 0 Lentilla de acercamiento Nº 0 Lentille additionnelle Nº 0	1/27.4–1/5.4	65.7 x 98.5–12.9 x 19.3	150–38.1	–	–	–
	クローズアップレンズNo.1 Vorsatzlinse Nr. 1 Lentilla de acercamiento Nº 1 Lentille additionnelle Nº 1	1/13.0–1/4.4	31.3 x 47.0–10.6 x 15.9	76.9–33.3	–	–	–
	クローズアップレンズNo.2 Vorsatzlinse Nr. 2 Lentilla de acercamiento Nº 2 Lentille additionnelle Nº 2	1/6.6–1/3.3	15.7 x 23.6–7.9 x 11.9	43.2–27.3	–	–	–
	E2リング E2 Ring Anillo E2 Bague E2	1/3.7–1/2.4	8.8 x 13.3–5.7 x 8.6	30.1–24.1	–	–	–
*	Kリング Zwischenringsatz K Equipo de anillos K Jeu de bagues K	1/8.9–1.1	21.4 x 32.0–2.3 x 3.4	56.2–20.0	–	–	–
**	PKリング Zwischenringe PK Anillos de serie PK Jeu de bagues PK	1/6.4–1.1	15.5 x 23.2–2.2 x 3.2	43.8–20.0	–	–	–
	ベローズPB-4、PB-5 Balgengeräte PB-4, PB-5 Fuelles PB-4 y PB-5 Soufflets PB-4, PB-5	1/1.2–3.6	2.9 x 4.3–0.67 x 1.0	20.2–29.6	1.6–4.3	1.5x2.3–0.56x0.83	21.0–33.1
***	スライド複写装置PS-4、PS-5 Diakopiervorsatz PS-4, PS-5 Adaptadores para copia de transparencias PS-4 y PS-5 Reprodias PS-4, PS-5	1/1.2–2.6	2.9 x 4.3–0.92 x 1.4	20.2–25.1	1.6–4.3	1.5x2.3–0.56x0.83	21.0–33.1
****	複写装置PF-2、PF-3 Reprogerät PF-2, PF-3 Equipo de reprocopia PF-2, PF-3 Statif de reproduction PF-2, PF-3	1/14.6–1/6.7	35.0 x 52.6–16.1 x 24.1	85.3–45.0	–	–	–

*Kリングのはじめの数値はK1リング1個使用のとき、あとの数値はK1～K5リングを連結したときのものです。

**PKリングのはじめの数値はPK-1リングまたはPK-11リング1個使用のとき、あとの数値はPK-1～PK-3リングまたはPK-11～PK-13リングを連結したときのものです。

*** スライド複写装置PS-4、PS-5のレンズ逆向き時の倍率範囲はBR-3リングを併用したときのものです。

**** 複写装置PF-2、PF-3はレンズ単体で用いたとき、複写台の載物面上の撮影可能範囲を示します。

* The first values are for the K1 ring used alone and the second ones for all five rings used together.

** The first values are for the PK-1 or PK-11 ring used alone and the second ones for three rings (PK-1 ~ PK-3 or PK-11 ~ PK-13) used together.

*** The Macro Ring Adapter BR-3 is used to connect the reverse mounted lens to the copying adapter.

**** The figures shown here represent the ranges obtained with the subject on the baseplate, using the lens without any close-up attachment.

* Die ersten Zahlen gelten für den Gebrauch des K1-Ringes alleine, die zweiten für alle 5 Ringe zusammen.

** Die ersten Zahlen gelten für den Gebrauch des PK-1 oder PK-11 Ringes alleine, die zweiten für 3 Ringe (PK-1 ~ PK-3 oder PK-11 ~ PK-13) zusammen.

*** Der Umkehrring BR-3 wird gebraucht, um das umgekehrt aufgestzte Objektiv an den Diakopiervorsatz anzuschliessen.

**** Die in dieser Kolonne aufgeführten Werte entsprechen den Bereichen, welche mit dem Objekt auf der Grundplatte und dem Objektiv ohne Nahaufnahme-Zubehör ermittelt wurden.

* Los primeros números son para anillo K1 usado solo, y los segundos números para el conjunto de cinco anillos usados juntos.

** Los primeros números son para el anillo PK-1 o PK-11 usado solo, y los segundos números para el conjunto de tres anillos (PK-1 ~ PK-3 or PK-11 ~ PK-13) usados juntos.

*** El Macro-Anillo Adaptador BR-3 se usa para conectar el objetivo montado a la inversa con el adaptador para copia de transparencias.

**** Las cifras aqui mostradas representan los rangos obtenidos con el sujeto sobre la base, usando el objetivo sin accesorios de acercamiento.

* Les premières données correspondent à l'utilisation de la bague K1 seule, les secondes à l'utilisation des cinq bagues du jeu.

** Les premiers chiffres sont pour le PK-1 ou PK-11 employé séparément et les seconds pour les trois bagues (PK-1 ~ PK-3 ou PK-11 ~ PK-13) montées ensembles.

*** La bague de conversion BR-3 permet l'utilisation de l'objectif retourné.

**** Ces donnés représentent les rapports obtenus avec un objectif démuni de tout accessoire de photomacrographie, le sujet étant placé sur le plateau du PF-2 ou PF-3.

Depth of Field

(ft)

Focused distance	Depth of field								Repro. ratio
	f/1.8	f/2	f/2.8	f/4	f/5.6	f/8	f/11	f/16	
1.5	1'5-13/16"–1'6-1/8"	1'5-13/16"–1'6-1/8"	1'5/3/4"–1'6-3/16"	1/5-11/16"–1'6-1/4"	1'5-9/16"–1'6-3/8"	1'5–7/16"–1'6-9/16"	1'5-1/4"–1'6-13/16"	1'4-15/16"–1'7-3/16"	1/6.8
1.7	1'8-3/16"–1'8-9/16"	1'8-3/16"–1'8-9/16"	1'8-1/8"–1'8-5/8"	1'8"–1'8–3/4"	1'7-7/8"–1'8-15/16"	1'7-5/8"–1'9-3/16"	1'7-3/8"–1'9-1/2"	1'7–1'10-1/16"	1/8
2	1'11-3/4"–2'1/4"	1'11-11/16"–2'1/4"	1'11-9/16"–2'3/8"	1'11-7/16"–2'9/16"	1'11-3/16"–2'13/16"	1'10-15/16"–2'1-1/8"	1'10-9/16"–2'1-5/8"	1'9-15/16"–2'2-1/2"	1/9.8
2.5	2'5-9/16"–2'6-3/8"	2'5-1/2"–2'6-7/16"	2'5-5/16"–2'6-5/8"	2'5-1/16"–2'6-15/16"	2'4-3/4"–2'7-5/16"	2'4-1/4"–2'8"	2'3-5/8"–2'8-13/16"	2'2-11/16"–2'10-5/16"	1/13
3	2'11-3/8"–3'5/8"	2'11-5/16"–3'11/16"	2'11"–3'1"	2'10-5/8"–3'1-7/16"	2'10-1/8"–3'2-1/16"	2'9-7/16"–3'3"	2'8-9/16"–3'4-5/16"	2'7-1/4"–3'6-11/16"	1/16
3.5	3'5-1/8"–3'6-7/8"	3'5"–3'6-15/16"	3'4-5/8"–3'7-3/8"	3'4-1/8"–3'8"	3'3-7/16"–3'8-7/8"	3'2-7/16"–3'10-5/16"	3'1-5/16"–4'3/16"	2'11-1/2"–4'3-3/4"	1/19
4	3'10-13/16"–4'1-3/16"	3'10-11/16"–4'1-5/16"	3'10-1/4"–4'1-7/8"	3'9-1/2"–4'2-11/16"	3'8-5/8"–4'3-15/16"	3'7-5/16"–4'5-13/16"	3'5-13/16"–4'8-7/16"	3'3-9/16"–5'1-1/2"	1/22
5	4'10-3/16"–5'1-7/8"	4'9-15/16"–5'2-1/8"	4'9-3/16"–5'3-1/16"	4'8-1/8"–5'4-7/16"	4'6-11/16"–5'6-7/16"	4'4-3/4"–5'9-11/16"	4'2-1/2"–6'2-5/16"	3'11-3/16"–6'-11-9/16"	1/28
7	6'8-3/8"–7'3-15/16"	6'8"–7'4-3/8"	6'-6-1/2" 7'6-5/16"	6'4-3/8"–7'9-5/16"	6'1-3/4"–8'1-11/16"	5'10-1/8"–8'9-1/8"	5'6-1/16"–9'8-5/16"	5'5/16"–11'9-9/16"	1/39
10	9'4-5/8"–10'8-3/8"	9'3-7/8"–10'9-7/16"	9'15/16"–11'1-5/8"	8'8-13/16"–11'8-1/2"	8'3-3/4"–12'6-15/16"	7'9-1/8"–14'1-7/8"	7'2"–16'9-13/16"	6'4-3/8"–24'7-1/8"	1/57
15	13'7-11/16"–16'8"	13'6-1/16"–16'10-1/2"	12'11-7/8"–17'9-3/16"	12'3-7/16"–19'3-5/8"	11'5-9/16"–21'9-7/8"	10'5"–27'2-1/16"	9'4-5/16"–39'3-7/16"	8'3/16"–157'5-5/8"	1/87
30	24'11-3/8"–37'7-13/16"	24'5-7/8"–38'9-1/16"	22'9-13/16"–43'10-3/4"	20'8-1/2"–54'10-1/16"	18'5-1/4"–82'3-1/4"	15'-10-1/8"–334'6-1/4"	13'5-7/8"–∞	10'10"–∞	1/175
∞	145'11"–∞	131'4-5/16"–∞	93'11"–∞	65'10-1/16"–∞	47'1-3/8"–∞	33'7/8"–∞	24'1-11/16"–∞	16'8-5/16"–∞	1/∞

被写界深度表
Schärfentiefe-Tabelle
Profundidad de Campo
Profondeur de Champ

(m)

撮影距離 eingestellte Distanz Distancia enfocada Distance de mise au point	被写界深度 Schärfentiefe Profundidad de campo Profondeur de champ								撮影倍率 Vergrösserungsbereich Relación de reproducción Rapport de reproduction
	f/1.8	f/2	f/2.8	f/4	f/5.6	f/8	f/11	f/16	
0.45	0.447–0.453	0.447–0.453	0.445–0.455	0.443–0.457	0.441–0.460	0.437–0.464	0.432–0.470	0.425–0.480	1/6.7
0.5	0.496–0.504	0.496–0.505	0.494–0.506	0.491–0.509	0.488–0.513	0.483–0.519	0.477–0.526	0.467–0.539	1/7.7
0.55	0.545–0.555	0.544–0.556	0.542–0.558	0.539–0.561	0.535–0.566	0.529–0.574	0.521–0.583	0.509–0.600	1/8.7
0.6	0.594–0.606	0.593–0.607	0.591–0.610	0.587–0.614	0.582–0.620	0.574–0.629	0.565–0.641	0.550–0.662	1/9.7
0.7	0.691–0.709	0.690–0.710	0.687–0.714	0.681–0.720	0.674–0.729	0.663–0.742	0.651–0.759	0.631–0.790	1/11.6
0.8	0.788–0.812	0.787–0.814	0.782–0.819	0.775–0.827	0.765–0.839	0.751–0.857	0.734–0.880	0.709–0.924	1/13.6
0.9	0.885–0.916	0.883–0.917	0.877–0.925	0.867–0.936	0.855–0.951	0.837–0.975	0.816–1.006	0.783–1.065	1/15.5
1	0.981–1.020	0.979–1.022	0.770–1.031	0.959–1.045	0.944–1.064	0.922–1.095	0.896–1.136	0.856–1.212	1/17.4
1.2	1.172–1.229	1.169–1.233	1.157–1.246	1.140–1.267	1.118–1.297	1.086–1.344	1.049–1.408	0.994–1.530	1/21.3
1.5	1.456–1.547	1.451–1.553	1.432–1.575	1.405–1.610	1.370–1.659	1.322–1.739	1.266–1.851	1.184–2.075	1/27.2
2	1.920–2.088	1.911–2.098	1.878–2.140	1.830–2.206	1.771–2.302	1.689–2.403	1.597–2.700	1.465–3.222	1/36.9
3	2.819–3.207	2.800–3.232	2.728–3.335	2.626–3.564	2.502–3.758	2.337–4.219	2.161–4.990	1.921–7.205	1/56.2
5	4.508–5.616	4.459–5.694	4.275–6.030	4.025–6.618	3.736–7.609	3.374–9.828	3.012–15.525	2.558–637.240	1/95.0
10	8.186–12.864	8.024–13.287	7.438–15.307	6.706–19.842	5.930–32.870	5.056–3195.7	4.274–∞	3.405–∞	1/191.9
∞	44.477–∞	40.039–∞	28.627–∞	20.068–∞	14.362–∞	10.082–∞	7.359–∞	5.089–∞	1/∞

Printed in Japan (79.2.CO) &-6