Part 5

Parts Catalog

Canon

EF 28-105mm 1:4-5.6 USM

REF.NO.C21-0151

PARTS CATALOG

	Code	Country of Origin
1.	CMT	CANON INC. MADE IN TAIWAN
2.	Blank	----

CANON LENS EF28-105mm 1:4-5.6 USM

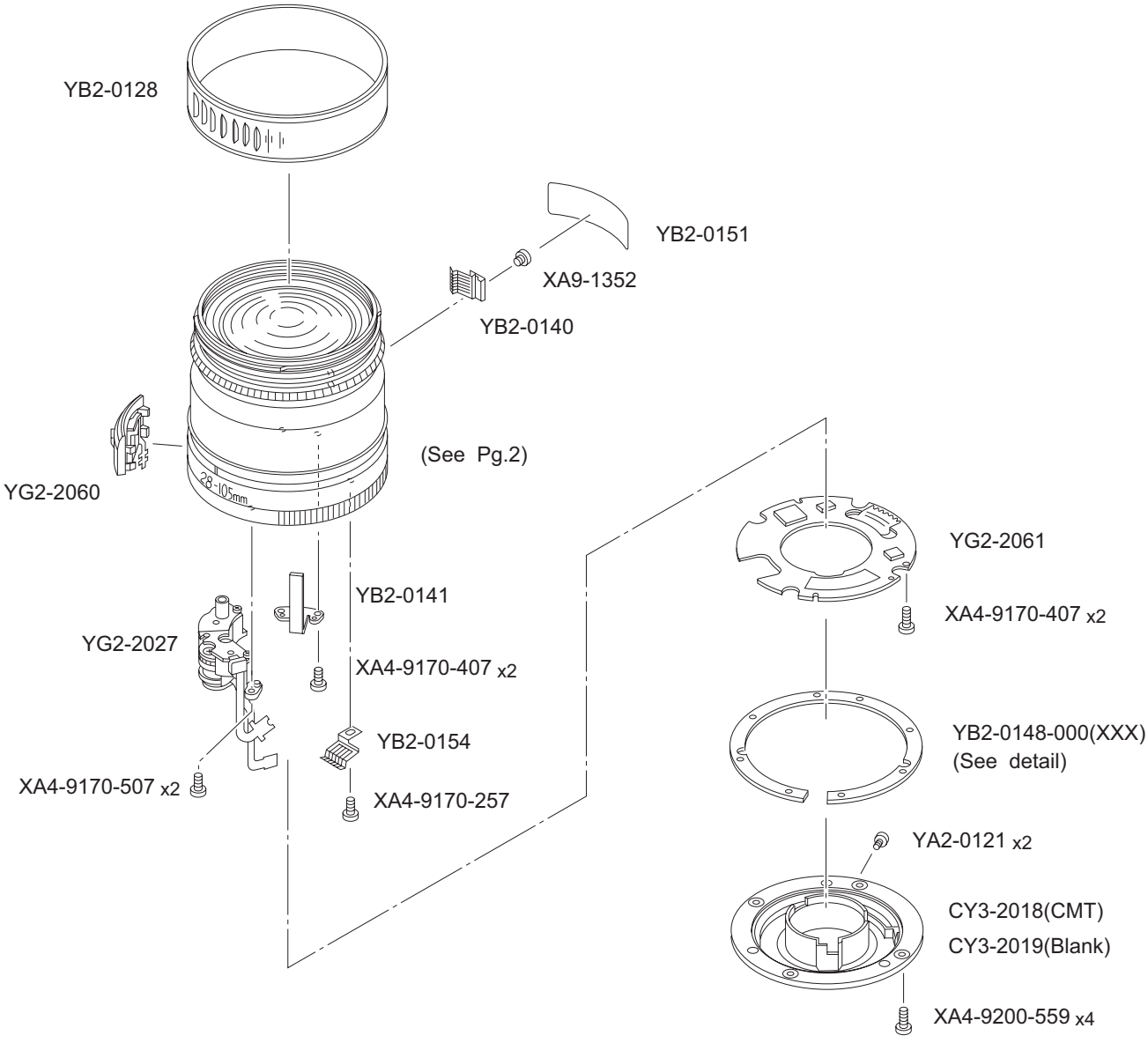

YB2-0148-000(XXX) detail

A	SIZE
0.05 mm	(005)
0.10 mm	(010)
0.188 mm	(020)
0.25 mm	(030)
0.50 mm	(050)

P A R T S L I S T

REF.NO. C21-0151

NEW	PARTS NO.		CLASS	QTY	D E S C R I P T I O N
*	CY3-2018-000	000	B	1	MOUNT (CMT)
*	CY3-2019-000	000	B	1	MOUNT (BLANK)
	XA4-9170-257	000		1	SCREW, CROSS-RECESS, PH
	XA4-9170-407	000		4	SCREW, CROSS-RECESS, PH
	XA4-9170-507	000		2	SCREW, CROSS-RECESS, PH
	XA4-9200-559	000		4	SCREW, CROSS-RECESS, PH
*	XA9-1352-000	000	C	1	SCREW
	YA2-0121-000	000	F	2	SCREW, SLOTTED, FFH
*	YB2-0128-000	000	B	1	RUBBER, ZOOM RING
*	YB2-0140-000	000	C	1	BRUSH, FOCUSING
*	YB2-0141-000	000	C	1	KEY, ZOOMING
*	YB2-0148-000	(XXX)	B	1	WASHER, MOUNT
*	YB2-0151-000	000	C	1	PLATE, BRUSH COVER
*	YB2-0154-000	000	C	1	BRUSH, ZOOMING
*	YG2-2027-000	000	B	1	FOCUSING UNIT (USM)
*	YG2-2060-000	000	B	1	SWITCH ASS'Y, A/M
*	YG2-2061-000	000	B	1	PCB ASS'Y, MAIN (USM)

CANON LENS EF28-105mm 1:4-5.6 USM

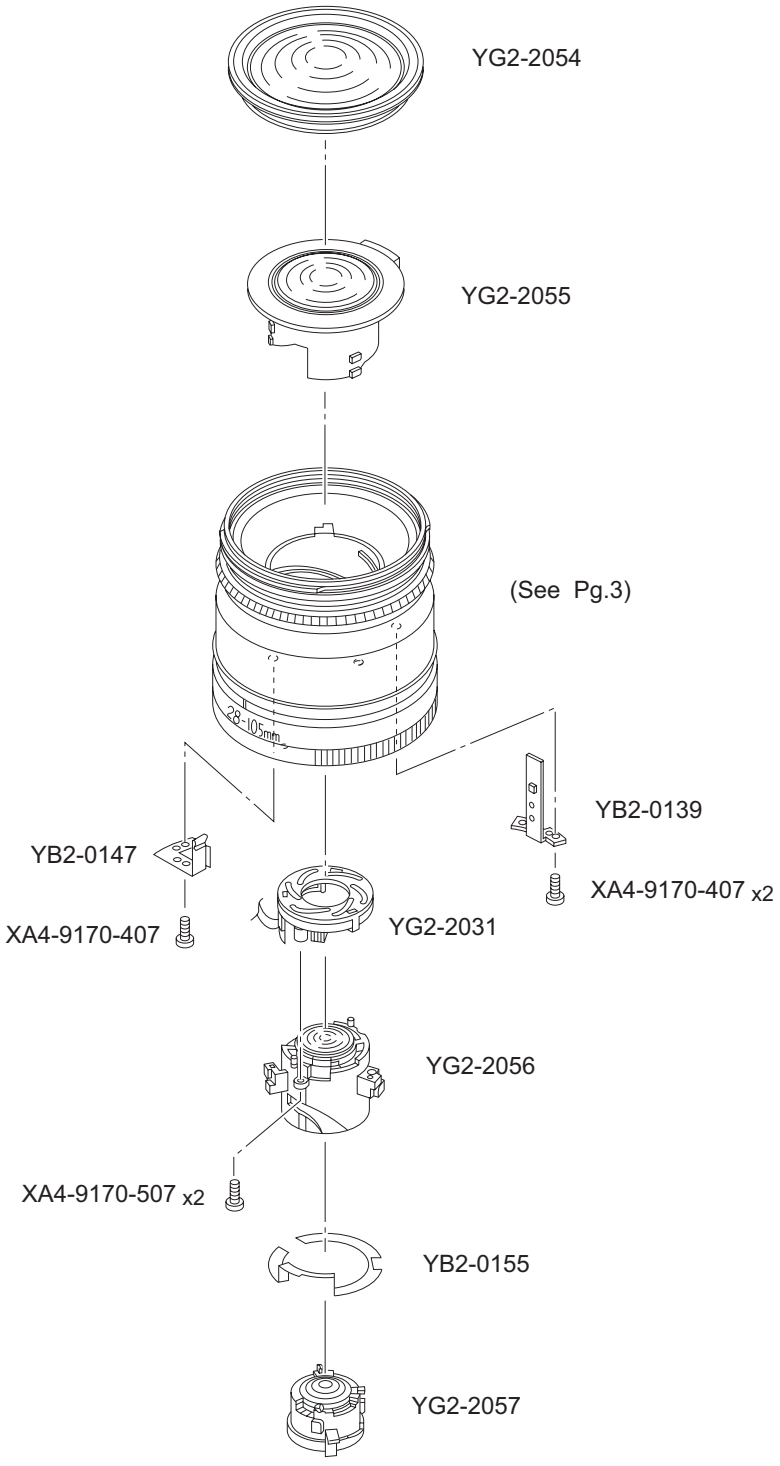

P A R T S L I S T

REF.NO. C21-0151

NEW	PARTS NO.		CLASS	QTY	D E S C R I P T I O N
	XA4-9170-407	000		3	SCREW, CROSS-RECESS, PH
	XA4-9170-507	000		2	SCREW, CROSS-RECESS, PH
*	YB2-0139-000	000	C	1	KEY, FOCUSING
*	YB2-0147-000	000	C	1	HOLDER, E-FLEX
*	YB2-0155-000	000	C	1	SHEET, LIGHT SHIELD
*	YG2-2031-000	000	B	1	POWER DIAPHRAGM UNIT
*	YG2-2054-000	000	B	1	LENS ASS'Y, 1ST (USM)
*	YG2-2055-000	000	C	1	LENS ASS'Y, 2ND
*	YG2-2056-000	000	C	1	LENS ASS'Y, 3RD
*	YG2-2057-000	000	C	1	LENS ASS'Y, 4TH

CANON LENS EF28-105mm 1:4-5.6 USM

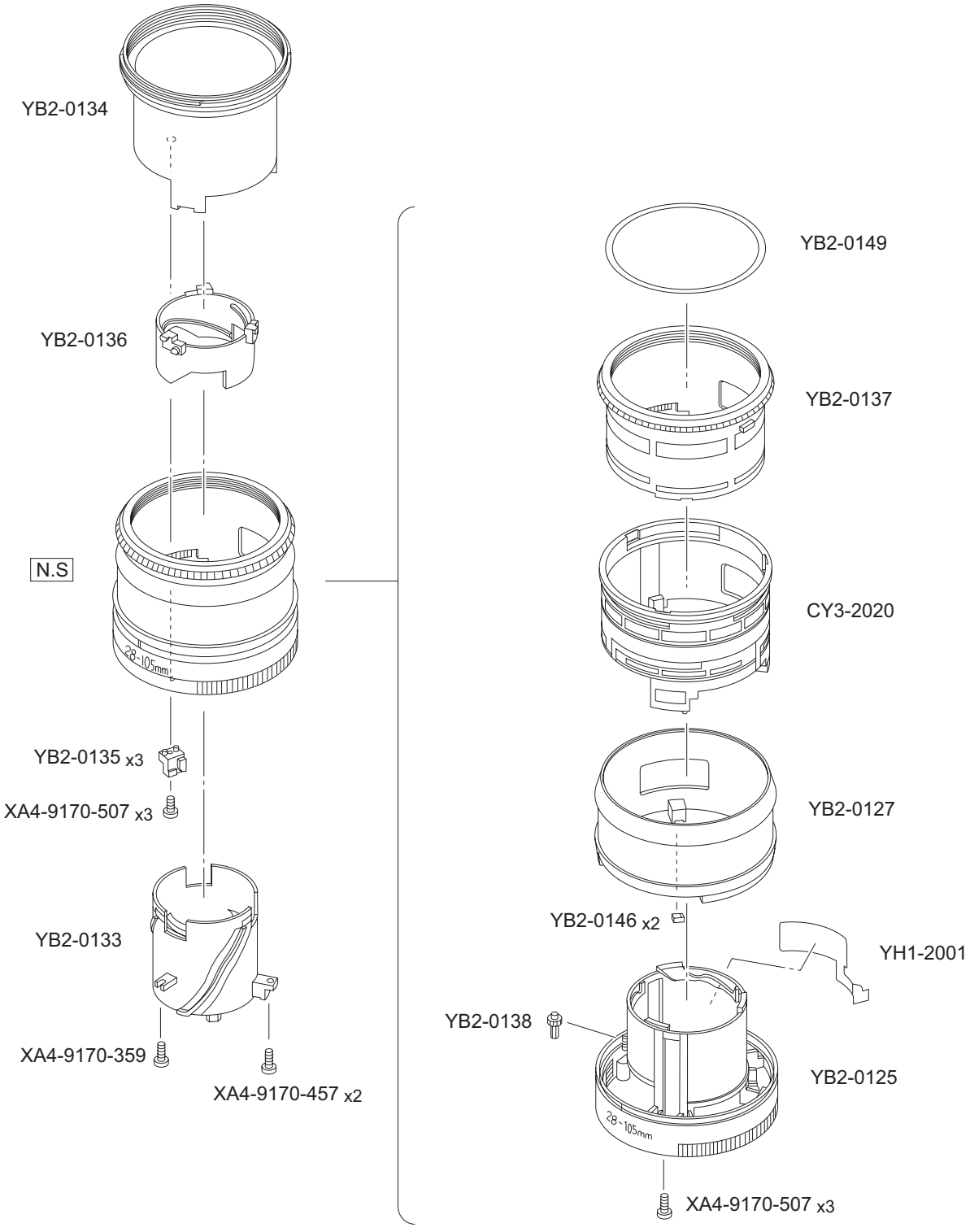

P A R T S L I S T

REF.NO. C21-0151

NEW	PARTS NO.		CLASS	QTY	D E S C R I P T I O N
*	CY3-2020-000	000	C	1	BARREL, SUB FIXED
	XA4-9170-359	000		1	SCREW, CROSS-RECESS, PH
	XA4-9170-457	000		2	SCREW, CROSS-RECESS, PH
	XA4-9170-507	000		6	SCREW, CROSS-RECESS, PH
*	YB2-0125-000	000	C	1	BARREL, FIXED
*	YB2-0127-000	000	B	1	RING, ZOOM
*	YB2-0133-000	000	C	1	BARREL, CAM
*	YB2-0134-000	000	B	1	RING, FILTER
*	YB2-0135-000	000	C	3	KEY
*	YB2-0136-000	000	C	1	BARREL, INNER CAM
*	YB2-0137-000	000	C	1	RING, MANUAL FOCUSING
*	YB2-0138-000	000	C	1	GEAR, FOCUSING
*	YB2-0146-000	000	C	2	RUBBER, FRICTION
*	YB2-0149-000	000	C	1	RING, LIGHT SHIELD
*	YH1-2001-000	000	C	1	FPC, FOCUSING
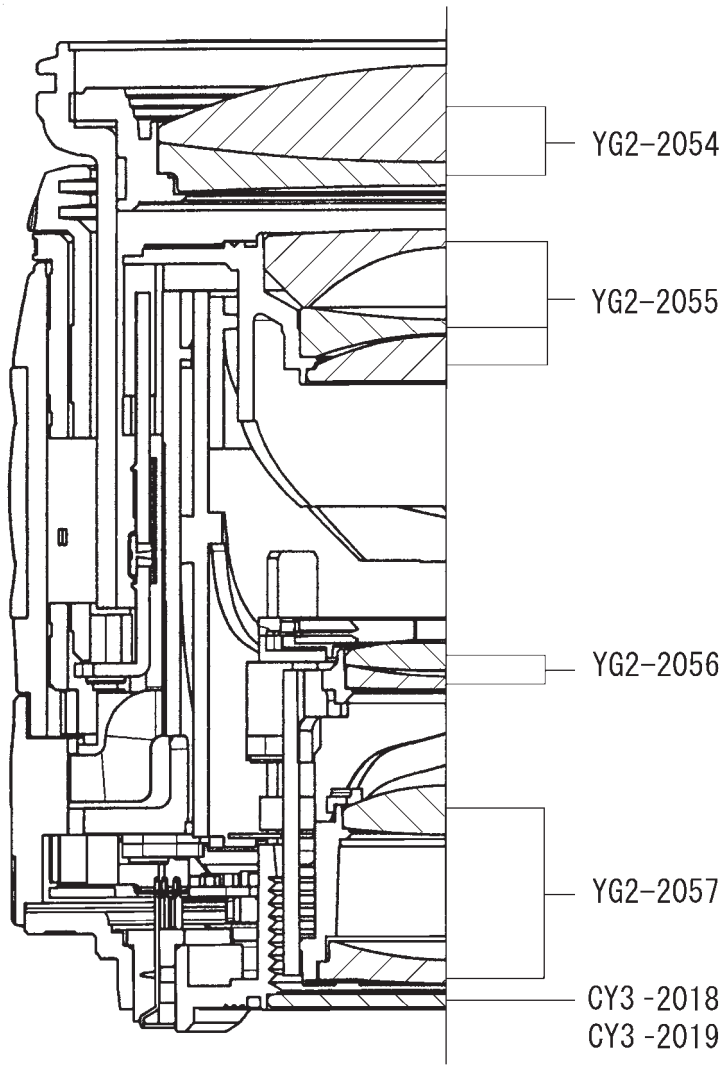
CANON LENS EF28-105mm 1:4-5.6 USM