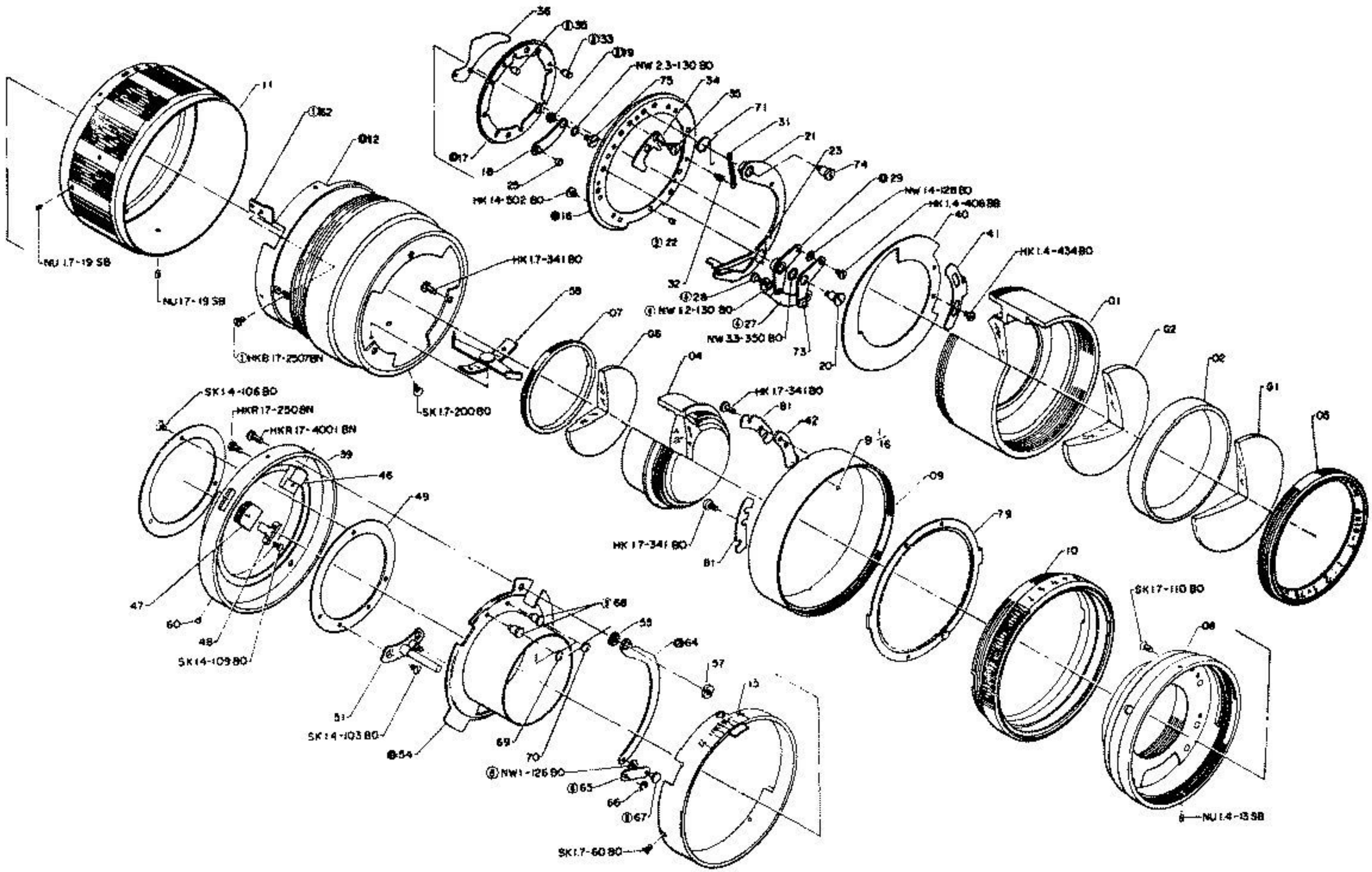

REPAIR MANUAL

MODEL	HOUSE CODE	
TELEPHOTO LENS F2 f=70mm FOR OLYMPUS PEN FT	C-143	FIG. 1/1
OLYMPUS OPTICAL CO. LTD. TOKYO JAPAN		